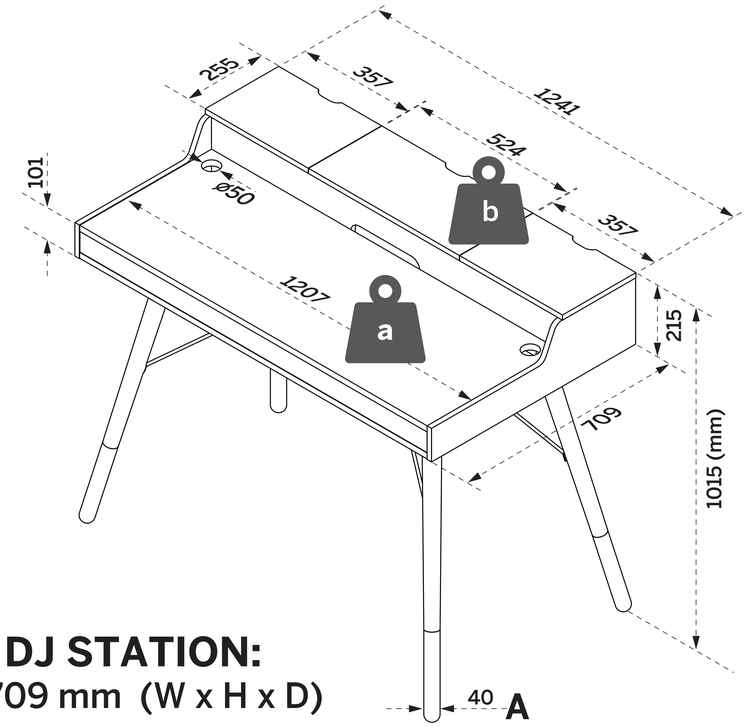

Dimensions DJ STATION:
1241 x 1015 x 709 mm (W x H x D)

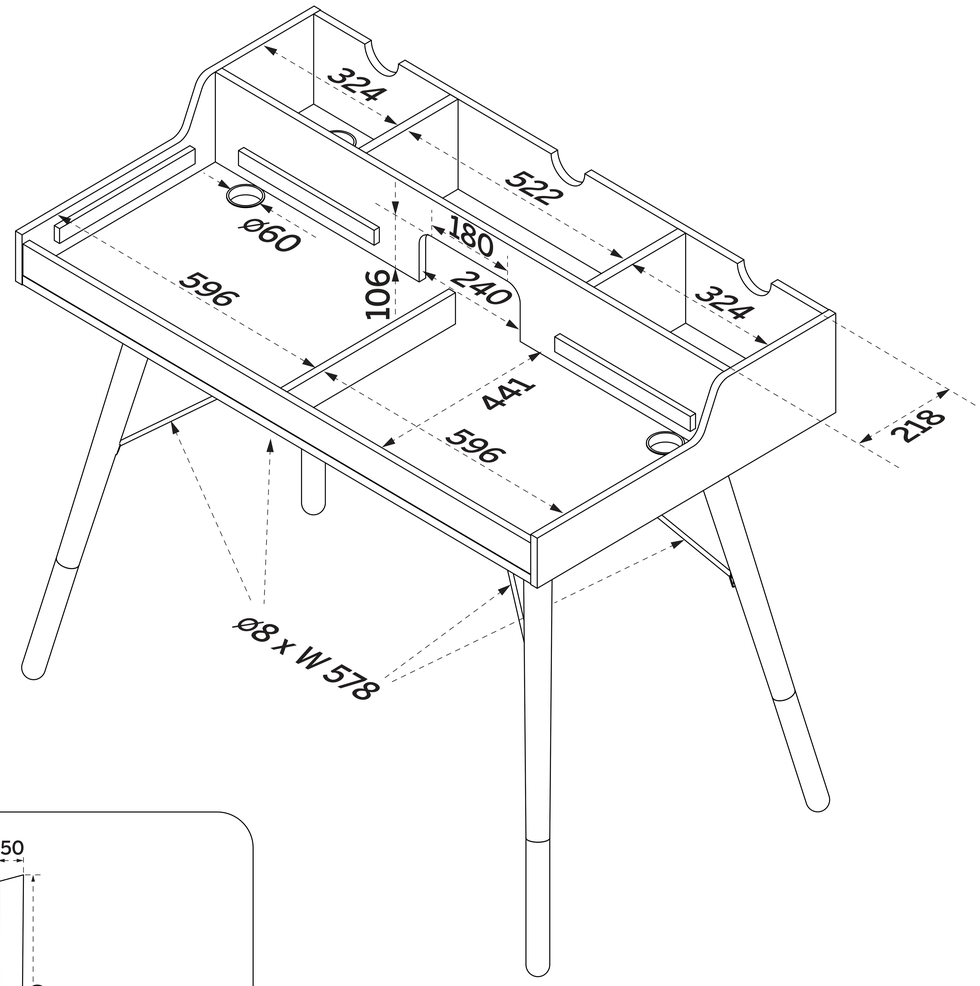

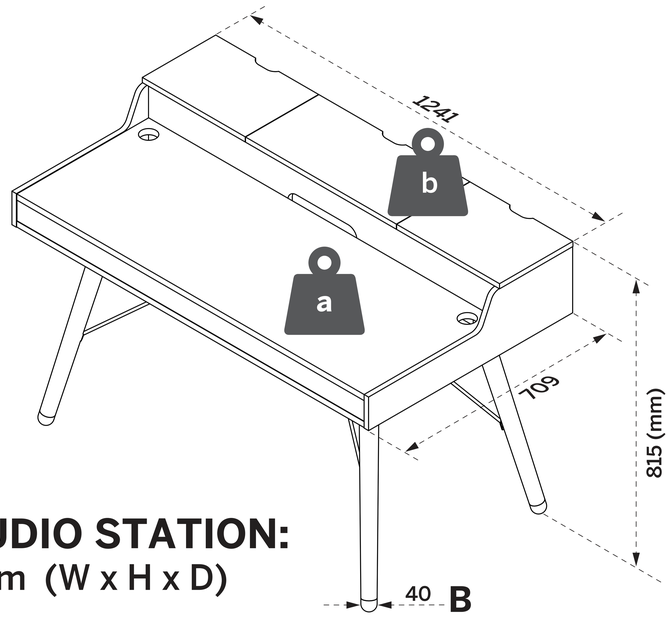

Dimensions STUDIO STATION:
1241 x 815 x 709 mm (W x H x D)

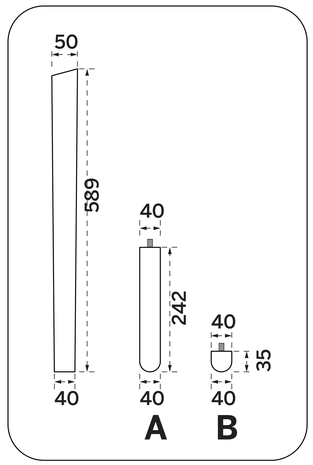

a + b = max. 40 kg

VINTAGE MUSIC STATION

GLORIOUS